LiGHT SKY



NEW

SUPER SCOPE AQUA

LED MOVING BSWP 4 IN 1

IP66 · CE · RoHS · RDM · DMX 512 · Art-net · S-ACN

FEATURES

- It is a waterproof beam spot wash profile, powered by 520W high-brightness LED source with a 146 mm diameter front lens.
- The optical system offers a wide zoom range of 3.8°–50°, delivering up to 34,500 lx@10m for excellent projection performance.
- The color mixing system with super smooth CMY mixing and linear CTO correction, plus one color wheel with 6 color filters and 1 high-CRI filter, ensuring rich and natural color rendering.
- one rotation gobo wheel with 7 pcs interchangeable glass gobos, and one static gobo wheel with 7 fixed gobos, providing versatile projection effects.
- Equipped with a dynamic animation wheel, motorized iris, and two frost filters, enabling smooth and refined visual transitions.
- The 4-blade, 8-direction framing system supports ±90° rotation, producing sharp, distortion-free edges and flexible creative control.

Unit: mm

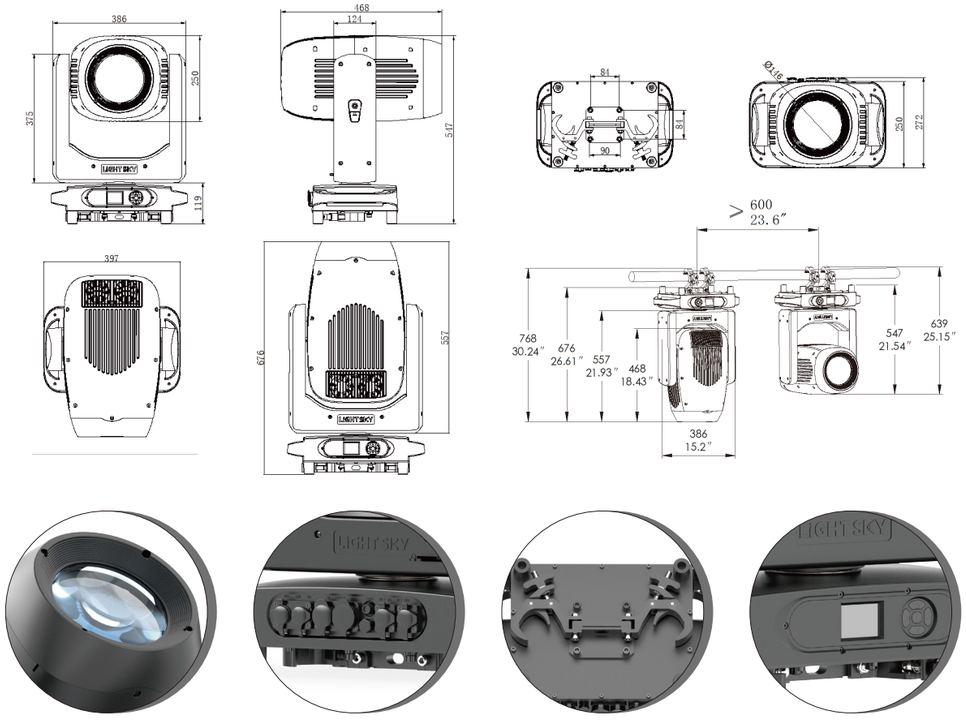

Light source & Optics

- Light Source: 520W White LED module
- Zoom Range: 3.8°- 50°
- Front Lens : Coated with High Transmission Anti-Reflection Film, ϕ146mm
- Colour Temperature Output: 7000 K
- Color Rendering Index (CRI): Ra≥70 / Ra≥88 (with high CRI filter)
- Illuminance: 34, 500 lx@10m
- Lumen Output: 24,000 lm
- Light Source Theory Life Span:≥ 50,000 h*

Color

- CMY infinite color mixing
- CTO color temperature linear adjustment (3000K~7000K)
- 6 color filters + blank + high CRI filter, capable of bi-directional color rainbow effect, bi-color step gradient (linear movement), bi-directional rotating color wheel, random color mode

Gobos

- Rotating Gobo Wheel: 7 glass gobos + blank, replaceable, with rotating, flowing, and shaking effects
- Fixed Gobo Wheel: 7 glass gobos + blank, with flowing, and shaking effects.
- Animation wheel : Bi-directional flowing effect , linear speed adjustment
- Eight-blade Framing: 4 shutter blades for fast, smooth cutting, each blade independently controllable, module rotatable ±90°

Effects

- 4-Linear Prism + 4-facet prisms with bi-directional rotation
- Light frost and Heavy frost ,independently switchable, stackable
- Motorized iris, linear adjustment from 5-100%, with macro function for multiple effect variations
- Electronic dimmer, linear adjustment from 0-100%, uniform light spot
- Electronic strobe speed adjustable from 0.5-25 flashes per second
- LED refresh rate: 1000Hz ~ 25KHz

Control and Programming

- Control Channels: 41CH, 53CH ,42CH (see channel chart for details)
- Protocols: DMX512, RDM, Art-Net, sACN
- Data connection: 3 pin or 5 pin XLR IN/OUT, Dual RJ45 ports
- Display: LCD screen

Software

- Software upgrade via DMX signal
- Temperature intelligent control, ensuring LED longevity
- Silent fan, three operation modes (high brightness / standard / silent)

Pan/Tilt Movement

- Pan: 540°, 8-bit / 16-bit precision
- Tilt: 270° , 8-bit / 16-bit precision
- Automatic reset with error correction
- Pan/Tilt Lock

Power and Electrical

- Input Voltage Range: AC 100-240V 50/60Hz
- Max Power Consumption: 847 W
- Power Factor: 0.99
- Maximum Fixture Current: 8.47A/100V; 3.8A/220V

Size and Weight

- Product Dimensions: 397mm × 272mm × 676mm
- Net Weight: 29.6 kg
- Carton Dimensions: 515mm × 360mm × 800mm
- Gross Weight: 35.8 kg (including folding hook)

Other

- IP Rate: IP66
- Operating Environment: -20℃ ~ 45℃
- Maximum Surface Temperature: 65℃

Factory Configuration

- Power Cable: 1 pc (Part No.: C1400050050)
- Signal Cable: 1 pc (Part No.: F0200020087)
- Safety Rope: 2 pcs (Part No.: F0200010002)
- Clamp: 1 set (Part No.: C0499990040)

Optional Accessories/Packaging

- Flycase Dimensions(2 in 1): 870mm x 550mm x 920mm
- Flycase Gross Weight(2 in 1): 103.5 kg

Color Wheel



Function Effect

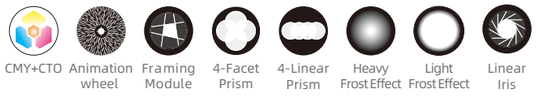

Illumination Diagram

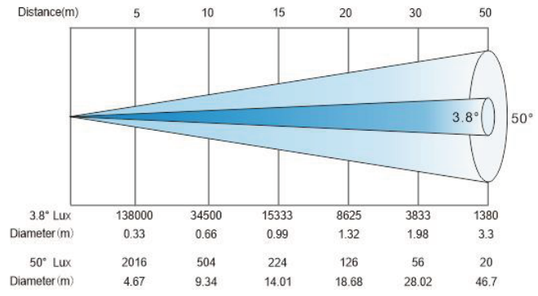

Rotation Gobo Wheel

Outer diameterϕ22.9mm, Inner diameterϕ15.0mm



Fixed Gobo Wheel

Outer diameterϕ22.9mm, Inner diameterϕ15.0mm

